TAMARACK
STEADFAST SOLAR MOUNTING

Tamarack Ground Mount Kit

Installation Manual

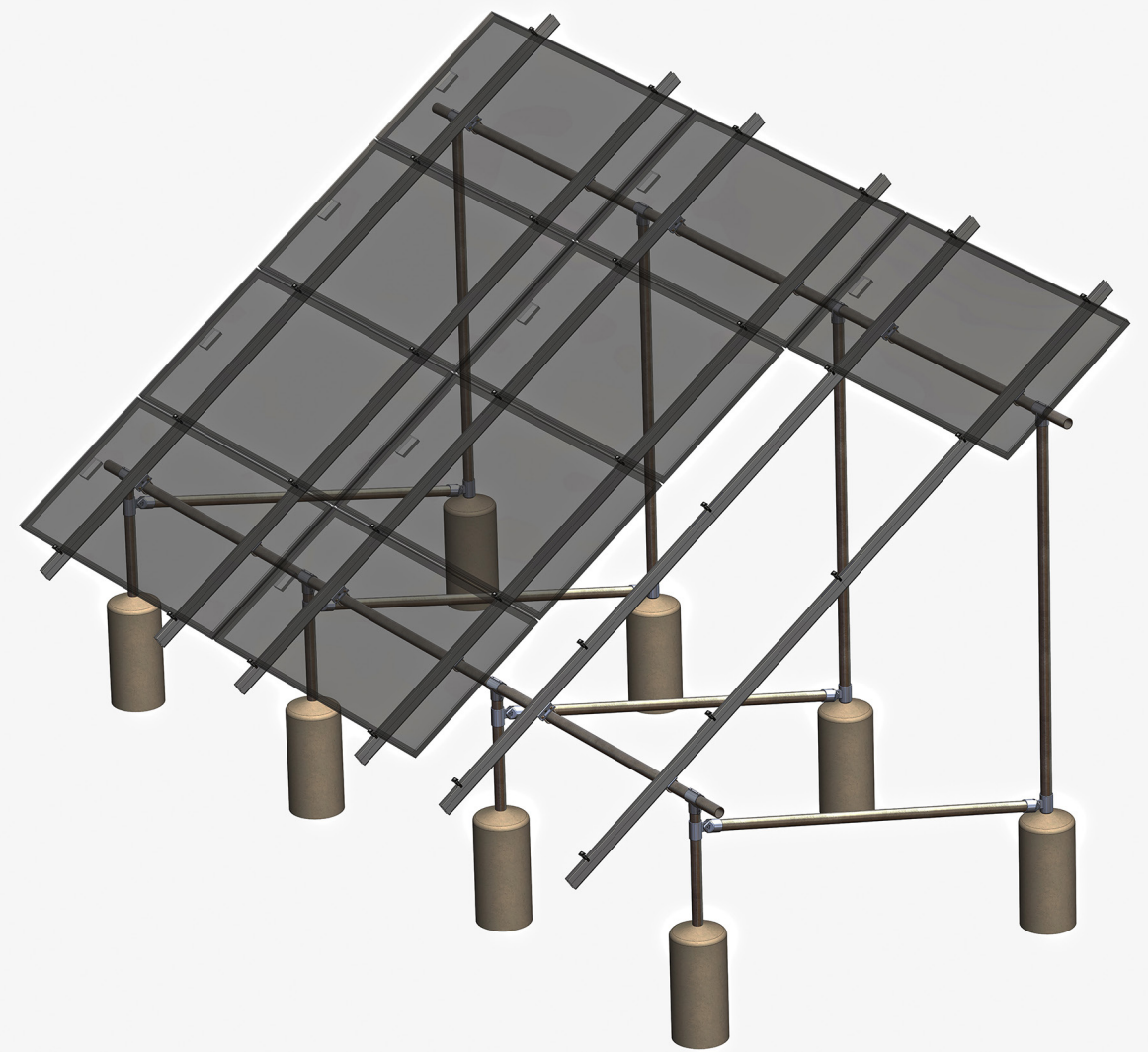

Table of Contents

Warranty Information 2
Features and Ratings 3
Installer Responsibilities 4
System Components 5
Tools Required - Torque Specifications - Components List 6
System Design and Installation Preparation 7
Online Tool 8
Foundation Design and Construction . . . . . .9 - 13
Attaching Rails 14
System Grounding 15
Module Level Power Electronics (MLPE) Installation & Wire Management 16
Module Installation . . . . . 16 - 17
Module Compatibility . . . . . 18 - 19

Customer Support

Tamarack Solar makes every effort to ensure your mounting kit is easy to install. If you need assistance at any point in your installation or have suggestions on how we can improve your experience, call customer support at 1-800-819-7236 ext 556 or email us at support@tamaracksolar.com

Technical Support: Call 707-234-8107 or email us at support@tamaracksolar.com

Warranty Information

Warranty details can be found on our website: **www.tamaracksolar.com/warranty/**

Disclaimer

This manual describes proper installation procedures and provides necessary standards required for product reliability. All installers must thoroughly read this manual and have a clear understanding of the installation procedures prior to installation. Failure to follow these guidelines may result in property damage, bodily injury or even death.

Tamarack Ground Mount System Features

- Designed for mounting photovoltaic (PV) arrays on the ground.
- Top clamps and rail attachments require the use of a single standard 1/2-IN socket
- 5050 Clamp for both mid-clamp and end-clamp use simplifies ordering and stocking parts.
- Module clamps are spring loaded to ease module placement.
- Built-in wire management for module and microinverter cables.

Tamarack Product Summary

The Tamarack Solar Ground Mount system is a visually appealing photovoltaic (PV) module installation system that significantly lowers PV module installation cost by allowing the installation professional to stock fewer parts and to complete the installation in less time.
Certified to meet local and International Building Codes and ASCE/SEI-7 when installed in accordance with this manual.
ETL Listed to UL 2307 for bonding and grounding when installed in accordance with this manual.
Rails, clamps, splices, and mounting devices are UL2703 Listed for mounting flat-plate Photovoltaic Modules and Panels

- Conforms to STD UL 2703 (2015) Standard for Safety First Edition: Mounting Systems, Mounting Devices, Clamping/Retention Devices, and Ground Lugs for Use with Flat-Plate Photovoltaic Modules and Panels.
- Certified to CSA STD LTR AE-001-2012 Photovoltaic Module Racking Systems.
- Max Overcurrent Protective Device (OCPD) Rating: 20A
- Max Module Size: 30 sq-ft²
- System Level Allowable Design Load Rating: meets minimum requirements of the standard (10 PSF downward, 5 PSF upward, 5 PSF lateral). Actual system structural capacity is defined by PE stamped certification letters.



5014275

Installer Responsibilities

• Comply with all applicable local or national building codes, including any that may supersede this manual.
• Ensure all products used are appropriate for the particular installation and the installation environment including the site's loading conditions. Parameters, such as snow loading, wind speed, exposure and topographic factor should be confirmed with the local building official or a licensed professional engineer.
• Use only Tamarack Solar parts or parts approved by Tamarack Solar; substituting parts may void any applicable warranty.
• Ensure safe installation of all electrical aspects of the PV array. Electrical installation should be conducted by a licensed and bonded electrician or solar contractor.
• If loose components or loose fasteners are found during periodic inspection, retighten immediately. If corrosion is found, replace affected components immediately.
• Review module manufacturer's documentation to ensure compatibility and compliance with warranty terms and conditions.
• Maximum Series Fuse Rating for the photovoltaic array is 30 Amps.
• Ensure bare copper grounding wire does not contact aluminum and zinc-plated steel components, to prevent risk of galvanic corrosion.
• Ensure information used for the system design is accurate. Any inaccurate information used for the system design will cause errors and are the installer's responsibility to correct.
• Provide an appropriate method of direct-to-earth grounding according to the latest edition of the National Electrical Code, including NEC 250: Grounding and Bonding, NEC 690: Solar Photovoltaic Systems, and CSA C22.1, Safety Standard for Electrical Installations, Canadian Electrical Code, Part 1
• Disconnect AC power before servicing or removing microinverters and power optimizers.
• Module maintenance or removal must not break the bonding path of the system.

For Technical Support, call 707-234-8107 or 800-819-7236 ext.556 or email us at support@tamarack-solar.com.

Ground Mount Kit Description

- **Kits contains all parts required except Schedule-40 pipe and concrete**
- **Rated for up to 170 MPH wind speed and 140 PSF of snow load**
- **Some situations require cross bracing (see online tool info on page 8)**

Tamarack Ground Mount Kit Components



3.1 inch Rail

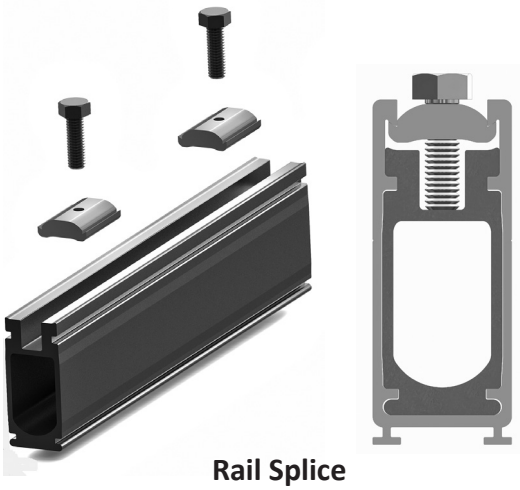

Rail Splice

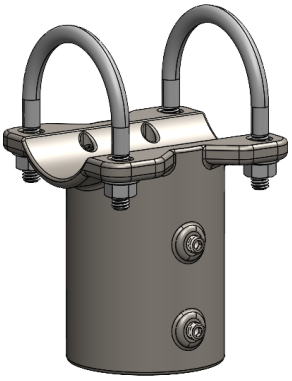

Pole Cap

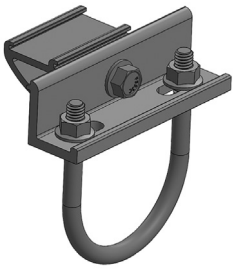

Pipe Mount

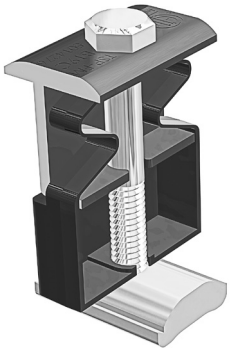

5050 Clamp



Ground Lug



Rail End Cap



Wire Clip

Optional Components (sold separately)

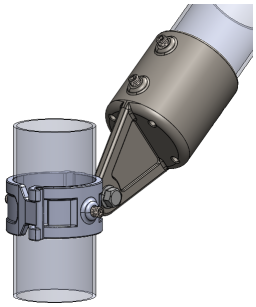

Swivel Tee Fitting
Use for cross bracing vertical posts when required by engineering. Two tees required for each brace.

For 2-IN pipe: **90699**
For 3-IN pipe: **91245 (2-Pack)**

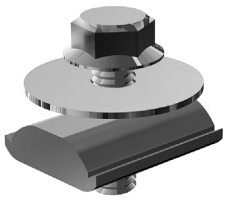

MLPE Mount
Use MLPE Mounts to attach microinverters or optimizer to rails. Use one per module.

Item #: **88481 (Bag of 12)**

Tools Required

- Post Hole Digger or Power Auger
- Torque Wrench (0-240 in-lbs recommended)
- 1/4-IN Hex Key Socket
- 3/16-IN Allen Head Driver Socket
- String Line and Level, or Transit
- Plumb Bob
- Tape Measure
- Chop Saw with metal-cutting blade (only required if cutting aluminum rails)
- Pipe Cutter for cutting steel pipe (reciprocating saw or portable bandsaw could be used)

Torque Specifications

Rail Adapter on Pipe Mount Clamp . . . . . 144 in-lbs (12 ft-lbs)
U-Bolt Nuts on Pipe Mount Clamp . . . . . 72 in-lbs (6 ft-lbs)
Swivel Socket Tees . . . . . 204 in-lbs (17 ft-lbs)
Pole Cap - U-bolts . . . . . 144 in-lbs (12 ft-lbs)
Pole Cap - Set Screws . . . . . 204 in-lbs (17 ft-lbs)
Rail Splice Lock bolts . . . . . 144 in-lbs (12 ft-lbs)
MLPE Mount (optional part, not included in kits) . . . . . 144 in-lbs (12 ft-lbs)
Ground Lug . . . . . 144 in-lbs (12 ft-lbs)
5050 Clamp as Mid-Clamp. . . . . 144 in-lbs (12 ft-lbs)
5050 Clamp as End-Clamp. . . . . .72-108 in-lbs (6-9 ft-lbs)
Ground Lug . . . . . 144 in-lbs (12 ft-lbs)
Ilsco SGB-4 Module Frame Ground lug (optional part, not included in kits) . . . . . 144 in-lbs (12 ft-lbs)

COMPONENTS LIST - GROUND MOUNT KITS

		3 Modules (per column)			4 Modules (per column)		
		GM KIT "A"	GM KIT "B"	GM KIT "C"	GM KIT "A"	GM KIT "B"	GM KIT "C"
		Item#: 91450-A 140" Rails - 4 Posts -	Item#: 91467-A 140" Rails - 2 Posts -	Item#: 91474-A 140" Rails - 0 Posts -	Item#: 90798-A 186" Rails - 4 Posts -	Item#: 90804-A 186" Rails - 2 Posts -	Item#: 90835-A 186" Rails - 0 Posts -
Part #	**Part Description**	**Quantity**					
90903	3.1 Rail Mill Finish 70-IN (each)	4	4	4			
90538	3.1 Rail Mill Finish 93IN (each)				4	4	4
90682	2-IN Pole Cap w/ U-bolts	4	2		4	2	
89556-B	3.1 Rail Splice	2	2	2	2	2	2
88955	Pipe Mount with U-Bolt	4	4	4	4	4	4
88450	5050 Clamp Black 30mm - 40mm	8	8	8	10	10	10
89846	3.1 End Cap	4	4	4	4	4	4
88504	Ground Lug	1	1	1	1	1	1
88474	Wiret Clip	8	8	8	8	8	8

Items below are not included with kits but may be required (sold separately)							
90699	2-IN Swivel Tee (BOX OF 2)	4 tees, if required	2 tees, if required		4 tees, if required	2 tees, if required	
88481	MLPE Mount	1 per module to attach microinverters or optimzer to rails					

System Design

- Make a drawing showing the dimensions of the mount system and the location of the mounting peers.
- Read this manual before beginning installation.
- Purchase 2-IN schedule 40 pipe for vertical posts, horizontal supports and cross bracing if necessary for your snow load and wind load requirement.
- Tamarack design information assumes the array is to be on ground with no more than 15 degrees of slope.
- Tamarack Ground Mount Kits are for use in sites with Class 3 or Class 4 soil type and terrain exposure category B.
- If terrain and/or soils conditions are different, consult a structural engineer.
  Class 3 Soil: Medium dense coarse sands, sandy gravels, very stiff silts, and clays
  Class 4 Soil: Loose to medium dense sands, firm to stiff clays and silts, alluvial fill
- Exposure Category B is an urban, suburban or wooded area. Obstructions the size of single family dwellings must surround the structure at within 2,630 ft or 10 times the mounting structure height in all directions, whichever is greater.

Preparations for Installation

Plan the PV array layout and confirm that plans comply with local AHJ requirements and applicable building codes. Leave enough room to work safely around the array during the installation process. Some building and fire codes require minimum clearances around PV module installations.

To accommodate modules being used, the length of the rails for each column should be at least equal to the total width of all of the modules in each column, plus 1/2-IN for each 5050 clamp used between modules, plus 2 inches total for end clamping (1 inch on each rail end).

The Tamarack Ground Mount Kits allow for two design configurations, either three or four modules per column in landscape orientation (long side of the modules parallel to the ground).

There are 6 Ground Mount Kits available; three for 3 modules per column, three for 4 modules per column and Swivel-Tees used for cross bracing.

North-South Post Spacing

The post spacing in the North to South direction (perpendicular to the array length) shall be determined as a function of the rail length and tilt angle per the formulas listed below. As an alternative, the tabulated values may be utitlized.

- **3-High Formula**: 0.672 * (3 * Panel Width) * COS(Tilt Angle)
- **4-High Formula**: 0.622 * (4 * Panel Width) * COS(Tilt Angle)

North-South Post Spacing

Max Panel Width (IN)	Array Height	Tilt Angle (deg)									
		0	5	10	15	20	25	30	35	40	45
40	3-High	81	80	79	78	76	73	70	66	62	57
	4-High	100	99	98	96	94	90	86	82	76	70
45	3-High	91	90	89	88	85	82	79	74	69	64
	4-High	112	112	110	108	105	101	97	92	86	79

Some configurations require cross bracing between each North and South vertical post. Bracing requirement is based on maximum snow load, maximum wind load and array tilt angle.

Continued...

Preparations for Installion continued...

You will need to determine the following information from our online Ground Mount sizing tool to purchase 2-IN Schedule-40 pipe and concrete:

1. Horizontal Pipe Length*
2. Vertical Post Spacing
3. Concrete Pier depth and diameter

This information will be in the Engineering and Parts List tab in our online tool. See below.

* Purchase 2-IN (NPS) ASTM A53 Grade B Schedule 40 Pipe, galvanized to a min of ASTM A653 G90 or ASTM A123 G35, or 2.375-IN (O.D.) Allied Mechanical Tubing with Gatorshield or FlowCoat Zinc Coating (ASTM A1057)

Use Our Online Tool to Design Your Ground Mount

tools.tamaracksolar.com/ground-mount

Solar Array and Environment Details Tab

Enter the dimensions and quantity of the modules you are planning to mount and the tilt angle you desire.

Enter Environment Information

Exposure Category - B, C or D
Snow Load
Wind Speed
Soil Type
South Facing Grade
Maximum Excavation Depth (optional)

Enter Material Costs (optional)

This will allow you to compare the cost of concrete for different pier depths and the cost of steel pipe with and without cross-bracing.

Understructure Configuration

This tab will allow you to choose 3 or 4 module rows and whether to use front to back bracing on the pipe structure. The boxes below pier sizing options give you the hole depth required and a relative cost per pier for various pier sizes.

Engineering and Parts List

This tab will give you the structural details and a list of which Ground Mount Kits you will need for your installation.

Part Number	Description
91450-A	3 Modules per Column with 4 vertical Poles
91467-A	3 Modules per Column with 2 vertical Poles
91474-A	3 Modules per Column with 0 vertical Poles
90798-A	4 Modules per Column with 4 vertical Poles
90804-A	4 Modules per Column with 2 vertical Poles
90835-A	4 Modules per Column with 0 vertical Poles
90699	2-IN Swivel Tee-Fitting (optional; for cross bracing)
88481 (Bag/12)	MLPE Mount

Foundation Hole and Post Layout

Using batter boards and string lines, lay out your footing locations for both the front and back east-west rows of piers. This will consist of two string lines, one for the front east-west row of piers and one for the back row of piers. Be sure that the two strings are parallel to each other, and with the proper spacing between the two east-west rows (this spacing depends on whether you use columns of 3 or 4 modules - see page 8).

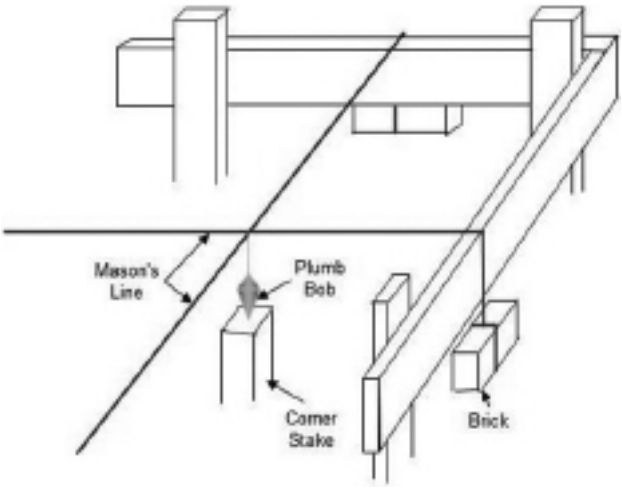

Once you have the two east-west string lines properly in place, place the first north-south string across one end, at the location where you want the first piers to be located. The first two piers (front and back) will be located directly below where the north-south string and two east-west strings cross.

Continue to add batter boards and north south strings, spaced apart according to the proper east-west pier spacing. If you only need four piers (two front and two rear), you will only need two north-south strings. If you need six piers total, you will need three north-south strings. Eight piers would required four strings, etc.

Make sure that the strings are in the proper locations and adjust as needed. Make sure that the whole layout is square and aligned evenly.

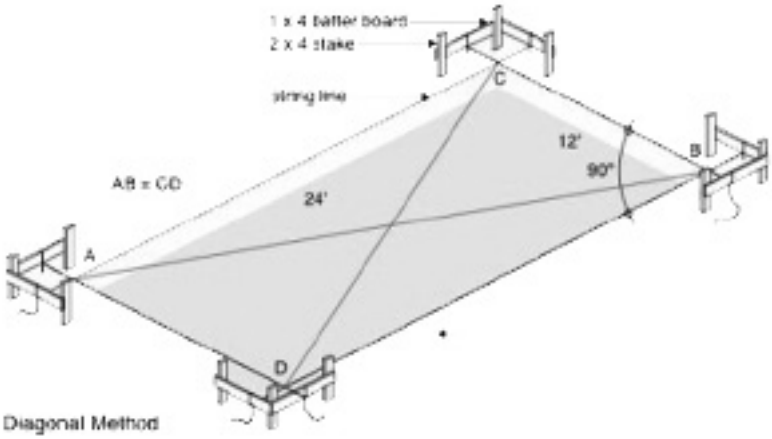

Directly below where each north-south string crosses one of the east-west strings will be the location of the center of a foundation hole and pier. Use a plumb bob to locate those points on the ground and drive a stake at each location. These are the centers of where the holes will be excavated. Once the stakes are driven, the strings may be temporarily removed.

Excavating Holes for Concrete Piers

Using a 12-IN power auger, excavate footings at marked locations to the depth required. Re-install the layout strings to make sure that the holes are excavated at the proper locations and adjust the hole centers if necessary. Clean out as much loose soil as you can from the augured holes.

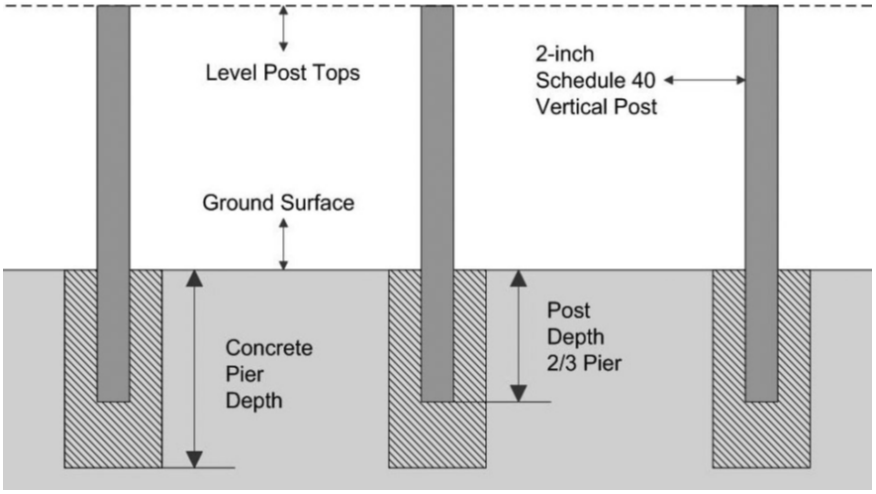

Assemble Pipe Structure and Prepare for Concrete

While there is a number of methods that can be used to set the vertical pipe posts in concrete, we recommend the following method which makes it easier to align and level the pipe sub-structure:

Using the Pole Caps for 2-IN posts and sections of 2-IN pipe, assemble both the front and back 2-IN pipe horizontal beams, placing the Pole Caps at the proper distance apart based on the required pier spacing. Tighten the Pole Cap U-bolts just enough to hold them in place, but not fully tightened as their location may need to be adjusted later. Leave the horizontal pipe longer than necessary until the rails are assembled. This will allow for some adjustment from side to side.

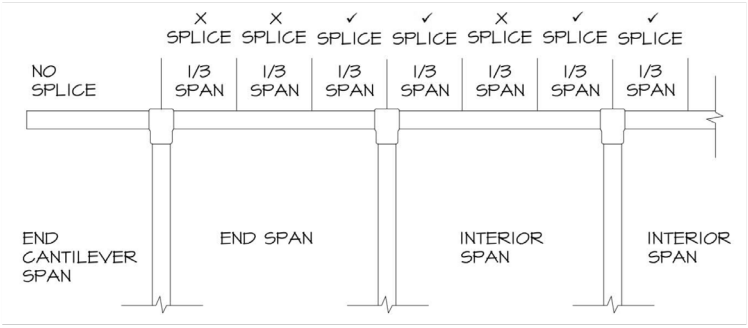

NOTE: Schedule-40 steel pipe is available in lengths up to 21 feet. For arrays with more than 3 or 4 columns, you may need to splice two sections of pipe together. Couplings are not permitted in the end cantilever section, in the outer 2/3 of an end span or in the middle 2/3 of an interior span. (See picture above. You can splice pipe sections in the center of a Pole Cap, or by using a 2-IN threaded pipe coupling or our 90705 Pipe Coupler, which can be used on pipe that is not threaded. If splicing pipes over a Pole Cap, pipe ends must have less than 1/2-IN between pipe ends.

The height of the north (rear) posts will be determined by the tilt angle of the array. See page 7.

For North-South post spacing, see formulas and chart on page 7.

Support the horizontal pipe beams at the proper height above the ground level using X-brace pipe supports made with 2x4 or 2x6 wood boards (or use commercially available pipe supports). The X-braces can each be made using two boards with holes drilled at the proper location, and a connected together with a single bolt and nut to act as a hinge.



Center the Pole Caps on the 2-IN pipes directly above the excavated holes.

Level the two horizontal beams; make sure they are straight and parallel with each other, and at the proper distance apart. The two boards of each X-brace can be pulled closer together at the bottom to raise the beam or drawn further apart to lower the beam to achieve level. Hold the X-braces in place with another board going down to the ground set at 90° to the X-braces as shown in the photos. Fine adjustment to level can also be done using

shims between the beam pipes and the X-Braces. If the horizontal beams are long, you can do this in sections for easier handling. Check for array tilt consistency along the entire length of array and adjust if necessary.
Use stakes at the bases of the brace boards to hold them in place. Steel concrete form stakes are perfect for this purpose, but you can also use wooden stakes.



Tops of the concrete piers need to be above ground level to keep water from pooling around the pipe posts. Use of Sonotube material to form a pedestal above the in-ground section of the concrete piers. Use 12-inch diameter Sonotube material or equivalent. It is only necessary for the tubes to be located from the ground level up. They do not need to extend into the holes. 6-inches above ground is plenty to produce a proper pier pedestal.

Temporarily hang Sonotube sections from the horizontal beams at each vertical post location before installing the pipe posts into the assembly. They will need to remain suspended until the concrete is poured, and then placed into position above ground level during the concrete pour.

Next, hang the pipe posts from the Pole Caps. Insert pipe posts into each hole, and lift them up through the suspended Sonotube rings and into the bottoms of the Pole Caps. Make sure that each post is fully inserted into each Pole Cap. Try not to allow the posts to contact the soil on the sides or bottom of the holes. If they do, do not allow any soil material to remain on or inside the pipes. Tighten the set screws on the Pole Caps just enough to hold the vertical pipes in place. Ensure that the bottom of each pipe extends 2/3 of the way to the bottom of the hole. Then tighten the Pole Caps set screws on the vertical pipe to make sure that they stay in place.

Make any horizontal adjustments to the Pole Caps required to center the vertical pipe in the holes. Do a final check to make sure that the horizontal beams are level and properly located at the correct spacing between each other, and that the posts are plumb and centered in the holes.

Pouring Concrete



Pour mixed concrete (minimum 2500 psi) into excavated holes. Use a tamping tool (a length of 2x4 works well) to compress the wet concrete. making sure there are no trapped air pockets. As you fill the hole with concrete make sure that the vertical post remains centered and plumb.
Fill the holes to ground level, and then lower the previously hung Sonotube sections down onto the wet concrete, keeping the pipe posts centered. Twist or shake the Sonotube to make sure it is in full contact with the wet concrete. Use a short level to make sure that the sides of the Sonotubes are plumb and fill the tubes with concrete. Trowel the tops of the concrete into a slight dome formation to allow for water drainage. See drawing at right.
Allow the concrete to cure for at least 24 hours before proceeding.

System With Cross Braces

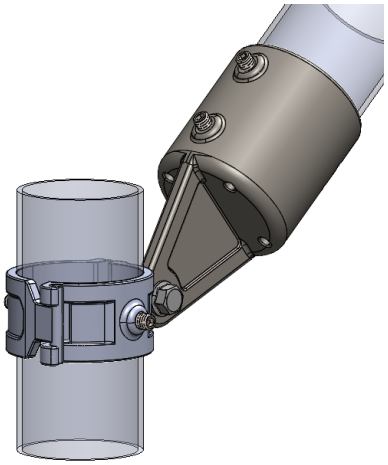

Skip this step if cross bracing is not required.
On each North-South post pair, attach a Swivel Tee.

Slide the Swivel Tee on the rear (north) post all the way to the bottom and slide the one on the front (south) post to the Pipe Cap on the top of the vertical pipe. This will allow space as you insert the brace pipes.

Face and align the two Swivel Tees towards each other – the socket on the raised south Swivel Tee facing down towards the Swivel Tee on the north post. Tighten the set screws just enough to hold both Swivel Tees in place.

Measure the length of pipe needed to be the brace pipe. The pipe ends can be inserted 2 inches into each Swivel Tee socket, but in order to insert the pipe into both Tees, the pipe will need to be cut shorter. Measure from the very inside of one of the Swivel Tees to the outside edge of the other Swivel Tee. Cut the pipe for the brace to this length.

To assemble the brace, first loosen the set screws on the Swivel Socket Tee at the bottom of the north post. Slide one end of the brace pipe fully into this Swivel Tee's socket until it bottoms out, and tighten the set screw on the brace pipe, but do not tighten the set screws on the post pipe yet.

Angle the brace pipe up toward the Swivel Tee on the south post. After loosening the set screws on this Swivel Tee, guide the end of the pipe into the socket and lower the Swivel Socket Tee assembly down until the pipe end is fully seated into the socket and tighten the set screw onto the brace pipe.

Loosen the set screws on both of the Swivel Tees that attach to the vertical posts. Position the brace assembly up so that there no more than 6-inches from the center of the north-post Swivel Socket Tee to the surface of the concrete, and no more than 6-inches from the center of the south horizontal beam and the center of the Swivel Socket Tee on the south post. See drawing at right.

Repeat this whole process for installing the cross braces on each north/south pair of posts. There may need to be changes to the lengths of the brace pipes from location to location, especially if the installation site is not completely level.

3 Modules per Column

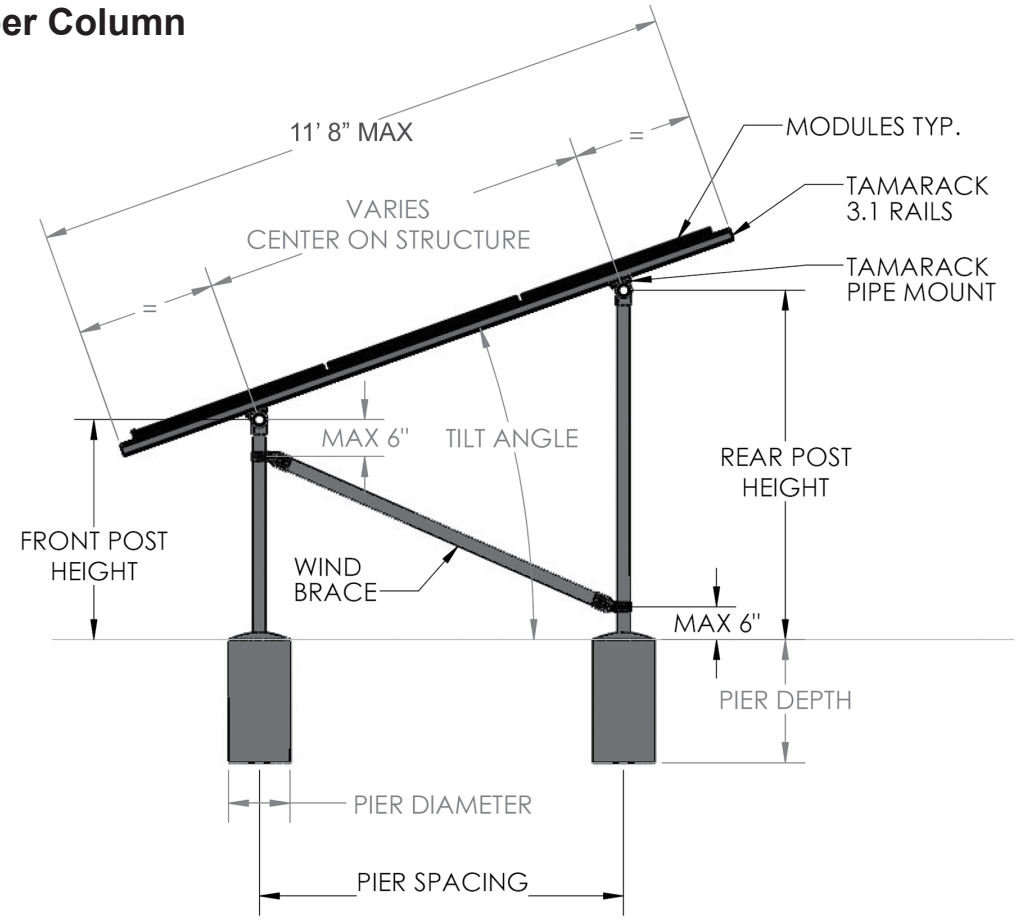

4 Modules per Column

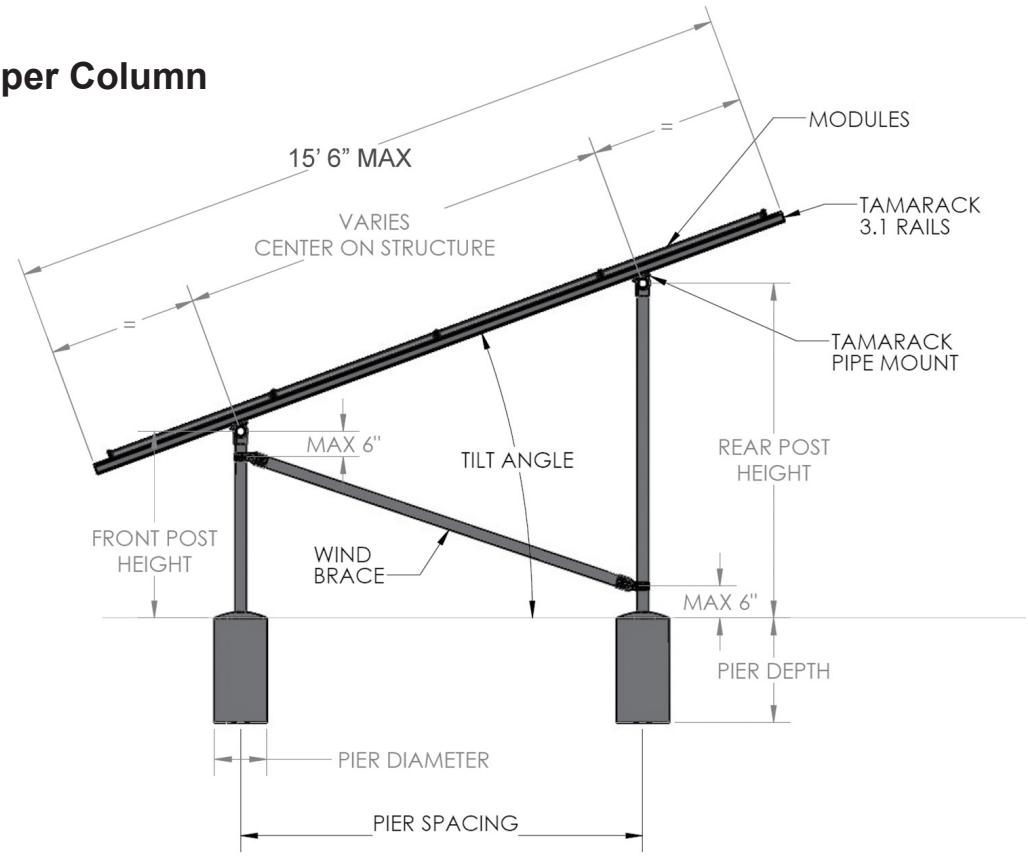

Assemble Module Support Rails

You will need two rail assemblies per column. Rails for 4 modules consist of two 93-inch 3.1 rails connected with a Rail Splice. The maximum module with that can be accomodated on this rail length is 45-inches. Rails for 3 modules consist of two 70-inch 3.1 rails connected with a Rail Splice. The maximum module width that can be accomodated on this rail length is 46.16-inches.

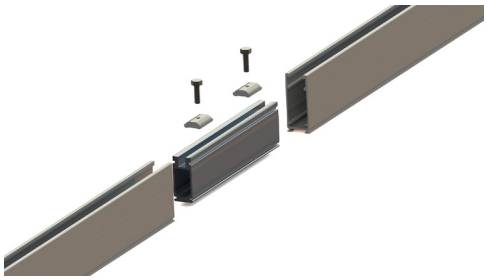

Insert the Rail Splice 5-inches into one rail end. Install one of the provided Rail Splice Locks (roughly centered in the 5-inch insertion) and tighten to hold it in place. Slide the second section of rail over the splice until it contacts the first section of rail and install the second Rail Splice Lock. Tighten both Rail Splice Lock bolts to 144 inch-pounds (12 foot-pounds). Either locking bolt may be loosened and moved slightly if it interferes with mid-clamp placement when installing modules

Attach Pipe Mount to Rail Assemblies

Each Pipe Mount consists of a Rail Adapter loosely bolted to an aluminum extrusion and a U-bolt with hardware. Attach Pipe Mount to all of the rails at this time. Position the Rail Adapter into the two features on the bottom of the rail, and finger tighten the bolt to allow for repositioning of the Pipe Mount on the rails.

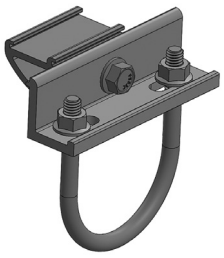

Pipe Mount

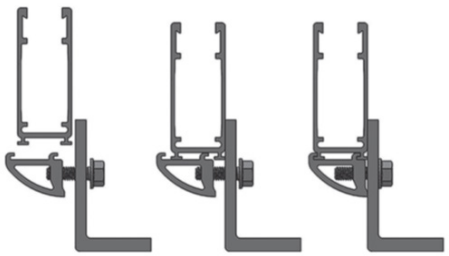

Install Rail Assemblies onto the Pipe Substructure

Mark the location of the rails on the lower horizontal pipe, leaving approximately 1/2-inch of space between the colums of modules.
Install the module rails to the horizontal pipes at the location marks using the U-bolts on the Pipe Mounts. Finger-tighten the flange nuts on the Pipe Mount U-bolts.
Square and center the rails at each end of the horizontal pipes and tighten their hardware to 72 inch-pounds (6 foot-pounds). Run a string line between the end rails and align the remaining rails. You will need to loosen the Pipe Mount U-bolt flange nuts in order to slide the rail up or down for alignment. Tighten the U-bolt nuts to 72 inch-pounds (6 foot-pounds) and the flange bolts on the rail clamps to 144 inch-pounds (12 foot-pounds) on all rail assemblies.



Attach Pipe Mount to Rail

Grounding the Array

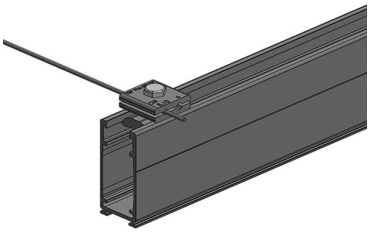

Tamarack rails and approved PV modules are bonded by 5050 Clamps and Splices. The 5050 Clamps achieve bonding to the module frames through stainless-steel pins in the clamping surface of the clamp tops, which penetrate module frame coatings. The rails and channel nuts are bonded because of the conductive surface of the mill finish aluminum used in the rail construction.

SolarEdge Optimizers and Enphase Microinverters are bonded to the rails with the Tamarack MPLE adapters. Other brands and models of power optimizers or microinverters may require a different grounding method.

The Tamarack Pipe Mount Clamps provide grounding continuity between the rail assemblies and the horizontal pipe.

The Pole Caps provide a grounding path between all connected sections of pipe.

Because all of the elements of an entire unified ground mount array are bonded electrically, the Tamarack Solar Ground Mount only requires a single Ground Lug for the grounding connection.

Use a Ground Clamp to bond a grounding conductor to one of the rails. It does not matter which rail in the array is used, but the rail closest to the final grounding connection should be chosen to reduce the grounding path as much as possible.

The Ground Clamp works with #10 - #6 AWG copper grounding conductors. A #6 AWG solid grounding conductor should be used if the conductor is in any way potentially exposed to damage.

NOTE: If the PV module that you are using is not listed on our approved module list at the end of this manual, the grounding method described above may not meet UL standards for grounding. In this case the proper grounding method would be to use a Module Frame Ground Lug on each module frame in the array, and connecting all of the frame grounding lugs together with a copper grounding conductor.

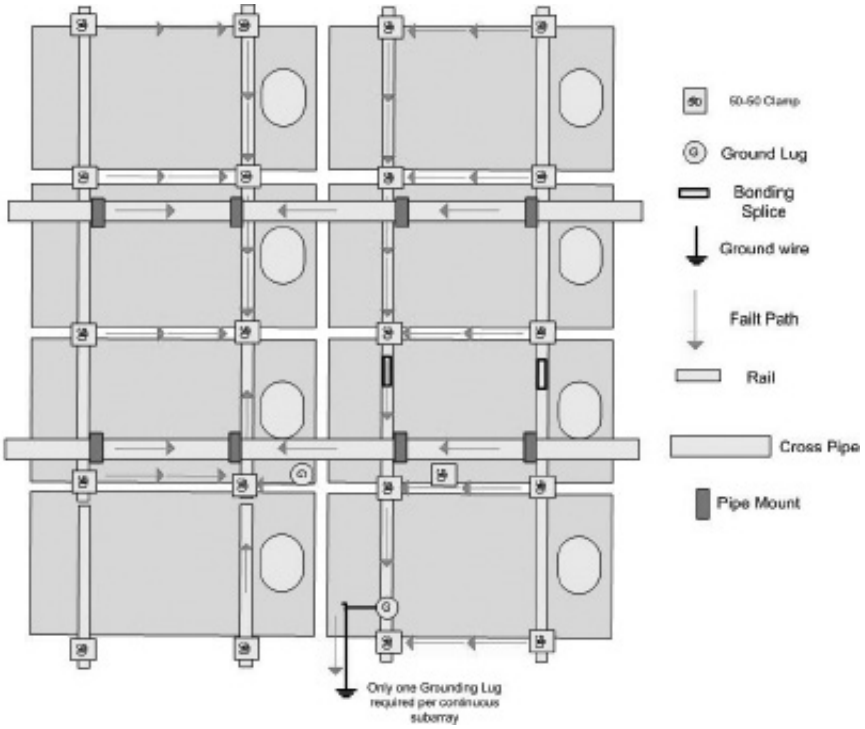

Module Level Power Electronics

If you are using rail mounted Module Level Power Electronics (MLPE), it is easiest install them before installing the solar modules onto the rail assemblies.

Use Tamarack MLPE Adapters (sold separately, see page 6) to attach Enphase microinverters or SolarEdge Optimizers to the rails. Tighten the bolts with a 1/2-inch socket to the specified torque.

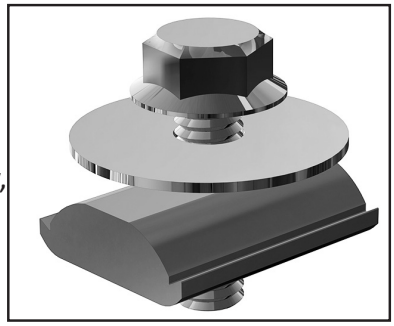



Wire Management

Place the array's electrical conductors and connectors into the cavity of the rail channels. Wires can be run through the splices, but check to be sure that they do not conflict with the self-drilling fasteners.
Install the Wire Management Clips where necessary to keep wires in the channels. If you are using MLPE, use these clips to keep the MLPE wiring in place as it is laid into the rail channels.
On a ground mount installation, these clips can be installed from behind the array as necessary to keep wires in place. Use as many as needed to ensure that the wires stay in the rail channels over the years.





PV Module Installation

To center the column of modules on the rails determine how much longer mounting rail length is than modules being installed. Calculate using width of PV modules, number of modules per column and ½-inch spacing between modules for mid-clamps.

Start module installation at bottom of the first column.

Place a solar module on the first set of rails so that it is the calculated distance from the lower end of the rails and secure it in place with a 5050 clamp on each rail. Since these clamps will be used as end clamps, place the side of the top clamp with two pins toward the modules. Center the first module east to west over the rails and hold in place. Make sure that the module is straight and level on the rails and tighten the two end clamp bolts to 96 inch-pounds (8 foot-pounds).

Install one 5050 Clamp in each rail on the other side of the first module and slide it down so that the inside of the clamp contacts the frame of the first module. The springs will hold the clamps in place prior to tightening. Place the second module on the rails, align it with the first module, and slide down and fully into the two mid-clamps. Tighten the mid-clamp bolts to 144 inch-pounds (12 foot-pounds) to fully secure the module.

Install the third module (and fourth module if installing columns of four) and mid-clamps on the rails in the column in the same manner, aligning the corners of the modules as you go up the column. Check to make sure that the modules in this first column are all even and straight, and where you want them to be.

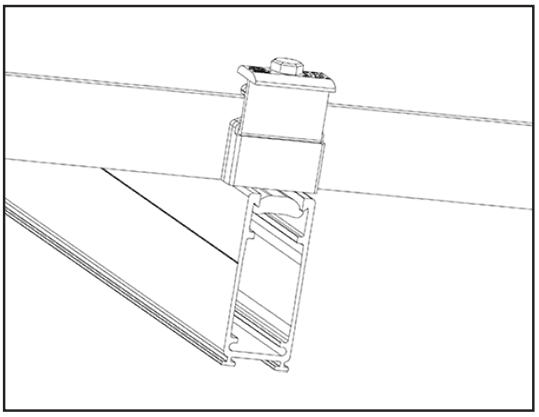

On the top edge of the last module of the first column, install the 5050 Clamps so that the sides with the two stainless-steel pins are facing in toward the module frame, and the clamp is tight up against the module frame. Tighten the two end clamp bolts to 96 inch-pounds (8 foot-pounds).

Install subsequent columns of modules in the same manner. Leave 1/2-inch of spacing between the columns. Make sure that all of the rails are centered between the north and south beams and extend past the south beam the same distance at the bottom end. Use a string line as an alignment aid, or just do this with line-of-sight.

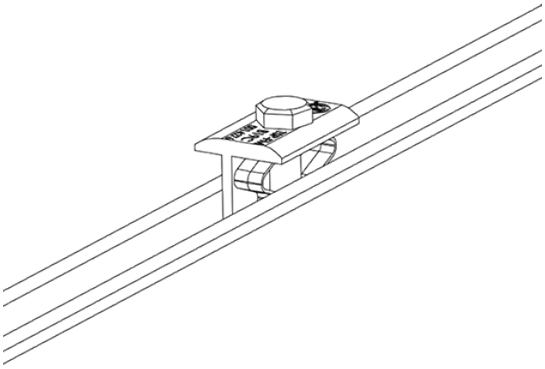

Do a final check to be sure that all bolts and installation hardware on the array is properly tightened to the specified torque values.

Module Compatability

The solar modules listed on the next two pages have been certified to meet UL 2703 standards when installed with a Tamarack Solar FM Rail System.

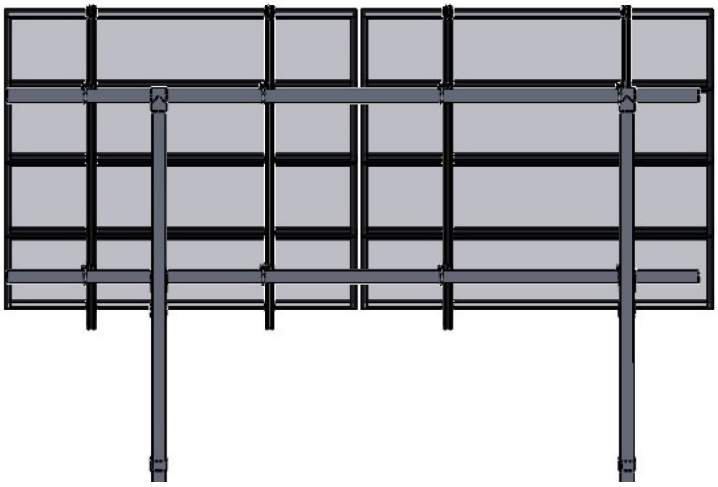

Back View

Certified Module List for UL61730 Listing Program	
Manufacturer	**Model**
Aleo	P18/P19/S18/S19/S59/S79.
AU Optronics	PM Series
Astronergy	modules with 30, 35, 40, and 45 mm frames aaSMbbyyC/zz-xxx Where “aa” can be CH or A; "bb" can be 60, 66, or 72; “yy” can be blank, 10 or 12; "C" can M, P, M(BL), M-HC, M(BL)-HC, P-HC, M(DG), or M(DGT); and “zz” can be blank, HV, F-B, or F-BH
Auxin	Modules with 35 mm frames AXN10YxxxZ where "y" can be M or B; "z" can be B, W or C modules with 40 mm frames AXN6y6zAxxx Where "y" can be M or P; "z" can be 08, 09, 10, 11, or 12; and "A" can be F or T
Axitec	Modules with 35 and 40 mm frames AC-xxxY/aaZZb Where "Y" can be M, P or MH; "aa" can be blank, 125- or 156-; "ZZ" can be 54, 60, 72, 120, or 144; "b" can be S
Boviet	Boviet modules with 35 and 40mm frames - BVMZZaaYY-xxxBcc Where "ZZ" can be 66 or 76; "aa" can be 9, 10 or 12; "YY" is M or P; and "B" can be blank, L or S; and "cc" can be blank, H, H-BF, H-BF-DG, H-HC, H-HC-BF, H-HC-BF-DG, HC-BF or HC-BF-DG]
BYD	BYD modules with 35 mm frames BYDxxxAY-ZZ Where "A" can be M6, P6, MH or PH; "Y" can be C or K; and "ZZ" can be 30 or 36
Canadian Solar	Canadian Solar modules with 30, 32, 35, and 40 mm frames - CSbY-xxxZ Where "b" can be 1, 3, 6, 6.2 or 7; "Y" can be H, K, L, N, P, R, U, V, W, X, Y, -48TM, or -54TM; and "Z" can be H, M, P, MS, PX, M-SD, P-AG, P-SD, MB-AG, PB-AG, MS-AG, MS-SD, MS-HL, HP, T, PB-AG, or TB-AG
CentrsoSolar	C and E series.
Certainteed	CertainTeed modules with 35 and 40 frames CTxxxYZZ-AA Where "Y" can be M, P, or HC; "ZZ" can be 00,01, 10, or 11; and "AA" can be 01, 02, 03, or 04
CSUN	Csun modules with 35 and 40 mm frames - YYxxx-zzAbb Where "YY" is CSUN or SST; "zz" is blank, 60, or 72; and "A" is blank, P, M or MM; "bb" is blank, BB, 5BB, BW, or ROOF
Dehui	Dehui modules with 30, 35 and 40mm frames - DH-MYYYZ-xxx Where "YYY" can be 760, 772, 860, 872; and "Z" can be B, F or W
Eco Solargy	ORION 1000 ECOXXXH156P-60, APOLLO 1000 ECOXXXT156M-60, and APOLLO 1000 ECOXXXA156M-60.
ET Solar	30, 35, 40, and 50 mm frames ET-Y6ZZxxxAA Where “Y” can be P, L, or M; “ZZ” can be 60, 72 or 72BH; and “AA” can be GL, WB, WW, BB, WBG, WWG, WBAC, WBCO, WWCO, WWBCO or BBAC
GCL	40mm frame: GCL-P6/72, 35mm frame: GCL-P6/72, GCL-P6/72H, GCL-M6/72, GCL-M6/72H, 35mm frame (Black frame): GCL-P6/60, GCL-M6/60
GigaWatt Solar:	Gigawatt modules with 40 mm frames - GWxxxYY Where “YY” can be either PB or MB
Hansol	Hansol modules with 35 and 40 frames HSxxxYY-zz Where "YY" can be PB, PD, PE, TB, TD, UB, UD, or UE; and "zz" can be AH2, AN1, AN3, AN4, HH2, HV1, or JH2]
Heliene	Heliene modules with 35 or 40 mm frames - YYZZxxxA Where "YY" can be 36, 60, 72, 96, 108, 120, 132, 144 or 156; "ZZ" can be HC, M, P, or MBLK, M10-SL, M10-SL-BLK, M10 Bifacial or M10 SL-Bifacial; and "A" can be blank, HomePV, Bifacial, M10 NTYP SL, or M10 NTYP SL Bifacial
Hounen	Hounen modules with 30 and 35 mm frames HNMY-AAA-xxx/M, Where "Y" can be 6, 7 or 8; "AAA" can be 72, NH120, NH144, NHDB144, NHLDD144, SH108, SH144, SHDB108, SHDB120, SHDB132, SHDB144, SHDB156, SHLDD120, SHLDD144, SPDB108, SPDB120, SPDB144, SPDB132, SPDB156, TP120, TPLDD120 or UHLDD144; and "M" can be M or N
HT Solar	HT60-156(M) (NDV) (-F), HT 72-156(M/P)
Hyundai	Hyundai modules with 30, 32, 33, 35 and 40 mm frames HiY-SxxxZZ Where "Y" can be A, D, N or S; "S" can be M, S or T; and "ZZ" can be GI, HG, HI, KI, MI, MF, MG, NF(BK), NJ, OJ, PI, RI, RG, RG(BF), RG(BK), SG, TI, TG, YH(BK), XG(BK), LE-FB(ZB),
ITEK	40 and 50 mm frames IT-xxx-YY Where “YY” can be blank, HE, or SE, or SE72
JA Solar	JA Solar modules with 30, 35 and 40 mm frames JAyyzz-bbww-xxx/aa Where “yy” can be M, P, M6 or P6; “zz” can be blank, (K), (L), (R), (V), (BK), (FA), (TG), (FA)(R), (L)(BK), (L) (TG), (R)(BK), (R)(TG), (V)(BK), (BK)(TG), or (L)(BK)(TG); “bb” can be 48, 54, 60, 66, or 72; "ww" can be D09, D40, D41, D45, S01, S02, S03, S06, S09, S10, S12; and “aa” can be BP, LB, MB, MR, SI, SC, PR, 3BB, 4BB, 4BB/RE, 5BB
Japan Solar	JPS-xxxP-60 (35mm), JPS-xxxM-60 (35mm), JPS-xxx-P-72 (40mm), JPS-xxxM-60-BB (35mm), JPS-xxx-P-72-BB (40mm)
Jinko	35 and 40 mm frames JKMYxxxZZ-aa Where “Y” can either be blank or S; “ZZ” can be M, P, or PP; and “aa” can be blank, 60, 60B, 60H, 60L, 60BL, 60HL, 60HB, 60HBL, 6HBL-EP, 60-J4, 60B-J4, 60B-EP, 60(Plus), 60-V, 60-MX, 7RL3-V, 7RL3-TV, 72, 72B, 72-J4, 72B-J4, 72(Plus), 72-V, 72H-V, 72L-V, 72HL-V, 72-MX, 72H-BDVP, 72HL-TV, or 72HL-V-MX3
Kyocera	KU26x-6MCA where x is 0 or 5.
LG	[LG modules with 35, 40, and 46 mm frames - LGxxxYaZ-bb Where "Y" can be A, E, M, N, Q, S; "a" can be A, 1, 2 or 3 "Z" can be C, K, T, or W; and "bb" can be A3, A5, A6, B3, B6, E6, G3, G4, J5, K4, L5, N5, V5 or V6]
LONGi	[Longi modules with 30, 35 and 40 mm frames - LRa-YYZZ-xxxM Where "a" can be 4, 5 or 6; "YY" can be blank, 60 or 72; and "ZZ" can be blank, BK, BP, HV, PB, PE, PH, HBD, HIB, HIH, HPB, HPH, or HIBD]
Maxeon	Maxeon (G3 or G4) or InvisiMount (G5) 40 and 46 mm frames - SPR-Zb-xxx-YY Where "Z" is either A, E, P, MAX, or X; “b” can be blank, 17, 18, 19, 20, 21, or 22; and “YY” can be blank, BLK, COM, C-AC, D-AC, E-AC, BLK-E-AC, G-AC, BLK-C-AC, or BLK-D-AC
Mission Solar (mSolar)	33 and 40 mm frames YYYbbxxxZZaa - Where "YYY" can be MSE, MSH, MSI, MST, MSX, TXI or TXS; "bb" can be blank, 6, 10 or 60A; "ZZ" can be blank, HN, HT, MM, SE, SO, SQ , SR, SX, TS, 108, 120 or 144; and "aa" can be blank, 0B, 1J, 2B, BB, BW, 4G, 4J, 4S, 4T, 5R, 5T, 6O, gJ, 6S, gW, 6Z, 8K, 8T, 9R, 9S or 9Z
Mitsubishi	Mitsubishi modules with 46 mm frames - PV-MYYxxxZZ Where "YY" can be LE or JE; and "ZZ" can be either HD, HD2, or FB
NSP	D6M and D6P
Optivolt	OPT10MxxxW where W is a variable that can be B or W for black or white backsheet
Panasonic	30 mm frames EVPVxxxA, Where “A” can be blank or H, K, HK or PK or Panasonic modules with 35 and 40 mm frames VBHNxxxYYzzA Where “YY” can be either KA, RA, SA or ZA; “zz” can be either 01, 02, 03, 04, 06, 06B, 11, 11B, 15, 15B, 16, 16B, 17, or 18; and “A” can be blank, E, G, or N
Peimar	40 mm frames SbxxxYzz Where “b” can be G, M or P; “Y” can be M or P; and “zz” can be blank, (BF) or (FB)

Certified Module List for UL61730 Listing Program	
Manufacturer	**Model**
Phono Solar	Phono Solar modules with 35, 40, and 45 mm frames - PSxxxY-ZZ/A Where "Y" can be M, M1, MH, M1H, M4, M4H or P; "ZZ" can be 20 or 24; and "A" can be F, T, U, UH, or TH]
Q CELLS	Q CELLS Modules with 30, 32, 35, 40 mm frames aaYY-ZZ-xxx where "aa" can be Q or B; "YY" can be PLUS, PRO, PEAK, LINE PRO, LINE PLUS, PLUS DUO or PEAK DUO; TRON "ZZ" can be G3, G3.1, G4, G4.1, L-G2, L-G2.3, L-G3, L-G3.1, L-G3y, L-G4, L-G4.2, L-G4y, LG4.2/TAA, BFR-G3, BLK-G3, BFR-G3.1, BLK-G3.1, BFR-G4, BFR-G4.1, BFR G4.3, BLK-G4.1, G4/SC, G4.1/SC, G4.1/TAA, G4.1/MAX, BFR G4.1/TAA, BFR G4.1/MAX, BLK G4.1/TAA, BLK G4.1/SC, EC-G4.4, G5, G5/SC, G5/TS, BLK-G5, BLK-G5/SC, BLK-G5/TS, L-G5, L-G5.1, L-G5.2, L-G5.2/H, L-G5.3, G6, G6/SC, G6/TS, G6+/TS, G6+, BLK-G6, L-G6, L-G6.1, L-G6.2, L-G6.3, G7, BLK-G6+, BLK-G6+/AC, BLK-G6+/HL, BLK-G6+/SC, BLK-G6/TS, BLK-G6+/TS, BLK-G7, G7.2, G8, BLK-G8, G8+, BLK-G8+ L-G7, L-G7.1, L-G7.2, L-G7.3, L-G8, L-G8.1, L-G8.2, L-G8.3, L-G8.3/BFF, L-G8.3/BFG, L-G8.3/BGT, ML-G9, BLK ML-G9, ML-G9+, BLK ML-G9+, ML-G10, BLK ML-G10, ML-G10+, BLK ML-G10+, ML-G10.a, BLK ML-G10.a, ML-G10.a+, BLK ML-G10.a+, XL-G9, XL-G9.2, XL-G9.3, XL-G9.3/BFG, BLK G10+/AC, BLK-G10+/HL, ML-G10, BLK ML-G10, ML-G10+, BLK ML-G10+, ML-G10.a, BLK ML-G10.a, ML-G10.a+, BLK ML-G10.a+, BLK ML-G10.C+, BLK ML-G10.C1+/AC, BLK ML-G10+/t, , XL-G2.3/BFG, XL-G9, XL-G9.2, XL-G9.3, XL-G9.3/BFG, XL-G10.d/BFG, XL-G10.d/BGT, XL-G10.3/BFG, XL-G10.3/BGT, XL-G11.3/BFG or XL-G11S.3/BFG, BLK M-G2.F1+/AC, BLK M-G2.H1+/AC, BLK M-G2+/AC, BLK M-G2.F+, BLK M-G2.H+, ML-G12S.3/BFG, ML-G12S.7/BFG
Risen	RSM72-6 (MDG) (M), RSM60-6
REC Solar	REC modules with 30, 38 and 45 mm frames - RECxxxYYZZ Where “YY” can be AA, M, NP, NP2, NP3, PE, PE72, TP, TP2, TP2M, TP2SM, TP2S, TP3M or TP4; and “ZZ” can be blank, Black, BLK, BLK2, SLV, 72, Pure, or Pure-R, Pure-RX or Pure 2
Renesola	Virtus II with module ratings of 250-260 in increments of 5. 156 series with module ratings of 270-275.
S-Energy	S-Energy modules with 35 and 40mm frames - SABB-CCYYY-xxxZ Where "A" can be C, D, L or N; "BB" can be blank, 20, 25, 40 or 45; "CC" can be blank, 60 or 72; "YYY" can be blank, BDE, MAE, MAI, MBE, MBI, MCE or MCI; and "Z" can be V, M-10, P-10 or P-15
Seraphim Energy Group	Seraphim modules with 30, 35, and 40 mm frames - SEG-aYY-xxxZZ Where "a" can be blank, 6 or B; "YY" can be blank, MA, MB, PA, or PB; and "ZZ" can be blank, BB, BG, BW, HV, WB, WW, BMB, BMA-HV, BMA-BG, BMB-HV
Seraphim USA	Seraphim modules with 30, 35, 40 and 50 mm frames - SRP-xxx-YYY-ZZ Where "xxx" is the module power rating; and "YYY" can be BMA, BMD, 6MA, 6MB, 6PA, 6PB, 6QA-XX-XX, and 6QB-XX-XX; ZZ is blank, BB, BG or HV
Sharp	60 and 72 NUSA-xxx/NUSC-xxx
Silfab	Silfab Modules with 35 and 38 mm frames - SYY-Z-xxxAb Where "YY" can be IL, SA, LA, SG or LG; "Z" can be blank, M, P, or X; "A" can be blank, B, H, M, N, Q, or X; and "b" can be A, C, C+, D, G, K, L, M, M+, N, T, U, X, HC+, HM, and HN
SolarWorld	Sunmodule Plus, Protect, Bisun, XL, Bisun XL, may be followed by mono, poly, duo, black, bk, or clear; modules with 31, 33 or 46 mm frames SW-xxx, SolarWorld Sunmodule Plus, Protect, Bisun, XL, Bisun XL, may be followed by mono, poly, duo, black, bk, or clear; modules with 33 mm frames SWA-xxx
Solar4America	S4A550-144MH10STT
Solaria	40 mm frames PowerXT xxxY-ZZ Where “Y” can be R or C; and “ZZ” can be AC, BD, BX, BY, PD, PM, PM-AC, PX, PZ, WX or WZ
Sonali	SS 230 - 265
SunEdison	SunEdison Modules with 35, 40 & 50 mm frames - SE-YxxxZABCDE Where "Y" can be B, F, H, P, R, or Z; "Z" can be 0 or 4; "A" can be B,C,D,E,H,I,J,K,L,M, or N ; "B" can be B or W; "C" can be A or C; "D" can be 3, 7, 8, or 9; and "E" can be 0, 1 or 2
Suniva	Suniva modules with 35, 38, 40, 46, and 50 mm frames - OPTxxx-AA-B-YYY-Z and MVXxxx-AA-B-YYY-Z Where "AA" is either 60 or 72; "B" is either 4 or 5; "YYY" is either 100,101,700,1B0, or 1B1; and "Z" is blank or B
SunSpark	40 mm frames SYY-xxxZ-A Where “YY” can be MX or ST; and “Z” can be M, MB, M3, M3B, P or W; and "A" can be 60 or 72
Suntech	35, 40 and 50mm frames STPxxxy-zz/aa Where "y" is blank or S; and "zz" can be 20, 24, A60 or A72U; and "aa" can be Vd, Vem, Vfw, Vfh, Wdb, Wde, Wd, or Wfhb
Talesun	Talesun modules with 30, 35 and 40mm frames - TA6yZZaaxxx-b Where "A" can be D or P, "y" can be blank, F, G, H, I, or L; "ZZ" can be 60 or 72; "aa" can be M, M(H), or P; and "b" can be blank, B, T, or (H)
Tesla	Tesla modules with 40 mm frames - TxxxY Where "Y" can be H or S
Trina Solar	Trina Modules with 30, 35, 40 and 46mm frames - TSM-xxxYYZZ Where "YY" can be DD05, DD06, DD14, DE14, DE15, DE15V, DEG15, DEG15VC, DE19, DEG19C.20, DE06X, PA05, PC05, PD05, PD06, PA14, PC14, PD14, PE14, PE15, NE19RC, NE09RH.05, NED19RC.20, NEG21C.20, NE19RC, NEG19RC.20 ; and "ZZ" can be blank, .05, .05(II), .08, .10, .18, .08D, .18D, 0.82, .002, .00S, 05S, 08S, .20(II), A, A.05, A.08, A.10, A.18, (II), A(II), A.05(II), A.08(II), A.082(II), A.10(II), A.18(II), H, H(II), H.05(II), H.08(II), HC.20(II), HC.20(II), M, M(II), M.05(II), MC.20(II)
Upsolar	UP-MxxxP, UP-MxxxP-B, UP-MxxxM, UP-MxxxM-B
URECO	FBM_M7G-BB and FBM_MFG-BB
Vikram	40 mm frames VSyy.ZZ.AAA.bb Where "yy" can be M, P, MBB, MH, MS, MHBB, or PBB; "ZZ" can be 60 or 72; "AAA" is the module power rating; and "bb" can be 03.04 or 05
VSUN	108 BMH, 108 BMH-DG, 132 BMH, 144BMH-DG
Yingli	YL xxx P-29b, YLM 60, YLM 72, YGE, YGE-VG, YLM, YL xxx P-35b, YL xxx D-30b, YL xxx D-36b
Waaree	AC, Adiya 60/72 Mono/Poly Black, Adiya 60/72 Multi
Winaico	35 and 40 mm frames Wsy-xxxZa Where "y" can be either P or T; "Z" can be either M, P, or MX; and "a" can be blank or 6
ZNShine	ZN Shine modules with 30 and 35 mm frames ZXMY-AAA-xxx/M, Where "Y" can be 6, 7 or 8; "AAA" can be 72, NH120, NH144, NHDB144, NHLDD144, SH108, SH144, SHDB120, SHDB144, SHLDD120, SHLDD144, TP120, TPLDD120 or UHLDD144; and "M" can be M or N
Certified Power Optimizer List for UL2703 Listing Program	
Manufacturer	**Model**
Enphase	M250-72, 250-60, M215-60, C250-72, S230, S280, IQ 6, IQ 6+, IQ 7, IQ 7+, IQ 7X, Q Aggregator
Solar Edge	P300, P320, P340, P370, P400, P405, P505, P600, P700, P730, P800p, P800s, P850, P860